STAINLESS STEEL BALL VALVE

FASE TO FACE ACC TO DIN 3202 - F 1

DN	15 - 200
PN	16 bar
T max	180°C

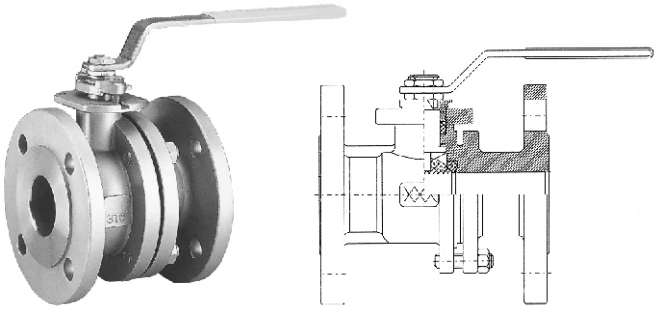

Application: For pipe systems transporting aggressive fluids.

Materials:

parts	acc to DIN	Ws. №
Body	G-X6CrNiMo18 10	1.4408
Ball	G-X6CrNiMo18 10	1.4408
Pivot	X5CrNiMo17 12 2	1.4401
Bonnet seal	G-X6CrNi18 9	1.4308
Gasket	PTFE+15%G/F PTFE	

Execution:

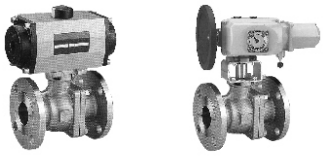

Size (mm):

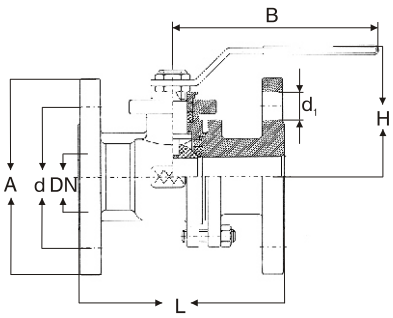

DN	L	H	A	d	B	n x d_1	kg
15	115	84	95	65	170	4 x 14	2.6
20	120	84	105	75	170	4 x 14	3.2
25	125	93	115	85	170	4 x 14	4.0
32	130	102	140	100	170	4 x 18	5.4
40	140	135	150	110	255	4 x 18	7.4
50	150	145	165	125	255	4 x 18	11.0
65	170	174	185	145	330	4 x 18	16.0
80	180	188	200	160	330	8 x 18	20.4
100	190	203	220	180	330	8 x 18	26.2
125	325	247	250	210	700	8 x 18	50.2
150	350	261	285	240	700	8 x 22	70.6
200	400	272	340	295	1050	12 x 22	115.0